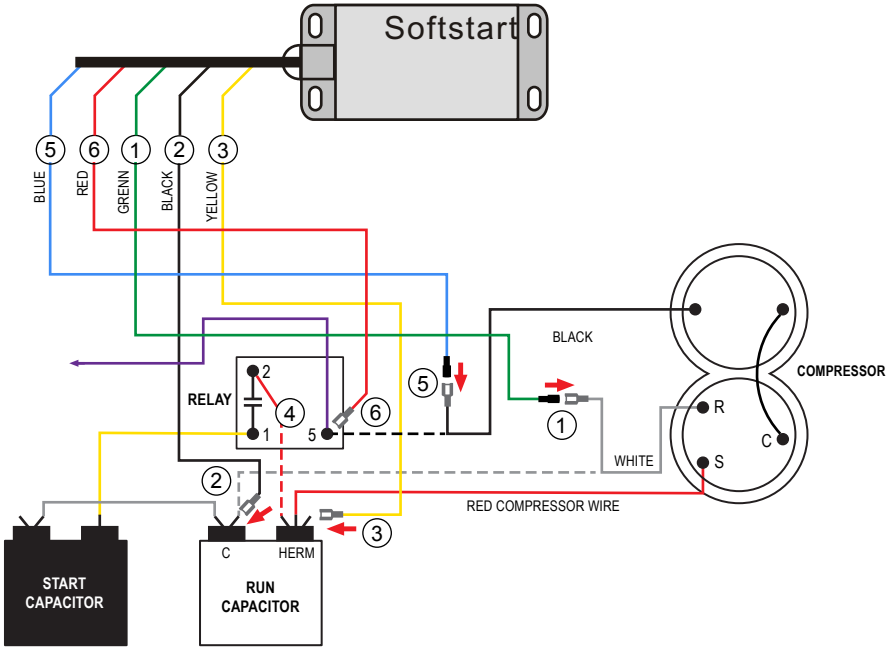

TURN ALL POWER OFF BEFORE STARTING INSTALLATION.

Route ALL SoftStart wires into the electrical box. Then crimp Connectors onto all SoftStart wires as indicated in drawing.

Step ① Follow White Compressor wire from Compressor to Run Capacitor “C” terminal. Disconnect from “C” terminal and connect it to Green SoftStart wire. Seal connection with electrical tape.

Step ② Connect Black SoftStart wire to the terminal that the White Compressor wire was on.

Step ③ Connect Yellow SoftStart wire on terminal next to Red Compressor wire on HERM side of Run Capacitor.

Step ④ **If there is another Red wire** next to the Red Compressor wire, disconnect it from Run Capacitor. Seal end with electrical tape and drop it.

Step ⑤ Follow Black Compressor wire to Relay. Disconnect Black wire from Relay and connect to Blue SoftStart wire. Tape connection.

Step ⑥ Connect Red SoftStart wire onto the Relay terminal that the Black Compressor wire was on.

Secure all wires. Seal connections with electrical tape.

Turn Power and A/C Breaker on. Turn A/C to Auto Cool setting and set the thermostat to 55ºF.

Look at SoftStart LED lights. Green light should be “on”. Green light means the Compressor is running (there may be a full 3-minute delay before Green light comes on). **IF there is no Green light after 4 minutes**, Copyright © EDWODER LLC. All Rights Reserved.

After establishing Green light operation, re-install all A/C covers.

Turn A/C on, set near to outdoor temperature and run for 30 minutes.

After 30 minutes, operate A/C normally.

Wiring Diagram for Coleman Mach 1976B037 Relay

Copyright © EDWODER LLC. All Rights Reserved.