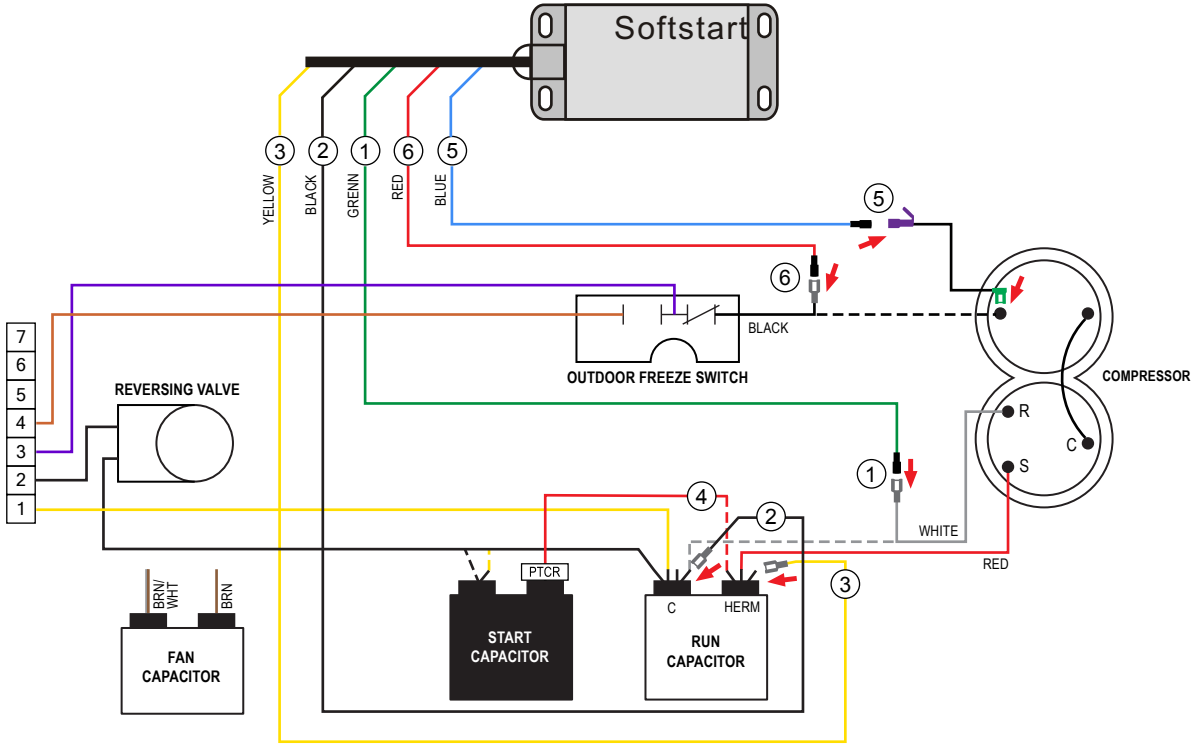

TURN ALL POWER OFF BEFORE STARTING INSTALLATION.

Route all SoftStart wires into the electrical box. Then crimp Connectors onto all SoftStart wires as indicated in drawing.

Step ① Follow White Compressor wire from Compressor to Run Capacitor “C” terminal. Disconnect from “C” terminal and connect it to Green SoftStart wire. Seal connection with electrical tape.

Step ② Connect Black SoftStart wire to the terminal that the White Compressor wire was on.

Step ③ Connect Yellow SoftStart wire on terminal next to Red Compressor wire on HERM terminal of Run Capacitor.

Step ④ **IF** there is a second Red wire next to the Red Compressor wire, disconnect it, seal end with electrical tape and drop it.

Step ⑤ Remove the Compressor Cap. Disconnect Black wire from Overload (OL) terminal. Connect Female Flag end of 4” Pigtail onto the terminal that the Black Compressor wire was on. Connect Blue SoftStart wire to Female side of Piggyback connector. Break off unused tangent from Piggyback connector. Tape connection or use heat-shrink sleeve to cover connection (no metal should be exposed). **Do not put wires back under cap.** Replace cap.

Step ⑥ Connect Red SoftStart wire onto the Black wire end that was connected to the Compressor. Tape connection (no metal should be exposed).

Secure all wires. Tape connections with electrical tape.

Turn Power and A/C Breaker on. Turn A/C to Auto Cool setting and set the thermostat to 55ºF.

Look at SoftStart LED lights. Green light should be “on”. Green light means the Compressor is running (there may be a full 3-minute delay before Green light comes on). **IF there is no Green light after 4 minutes**, please check the error code or contact us for assistance.

After establishing Green light operation, re-install all A/C covers.

Turn A/C on, set near to outdoor temperature and run for 30 minutes. After 30 minutes, operate A/C normally.

Wiring Diagram for Coleman Mach 1976E519 MODIFIED 7-22

Copyright © EDWODER LLC. All Rights Reserved