Turn All Power and Breakers OFF before beginning Install

GE Straight AC
820201190271

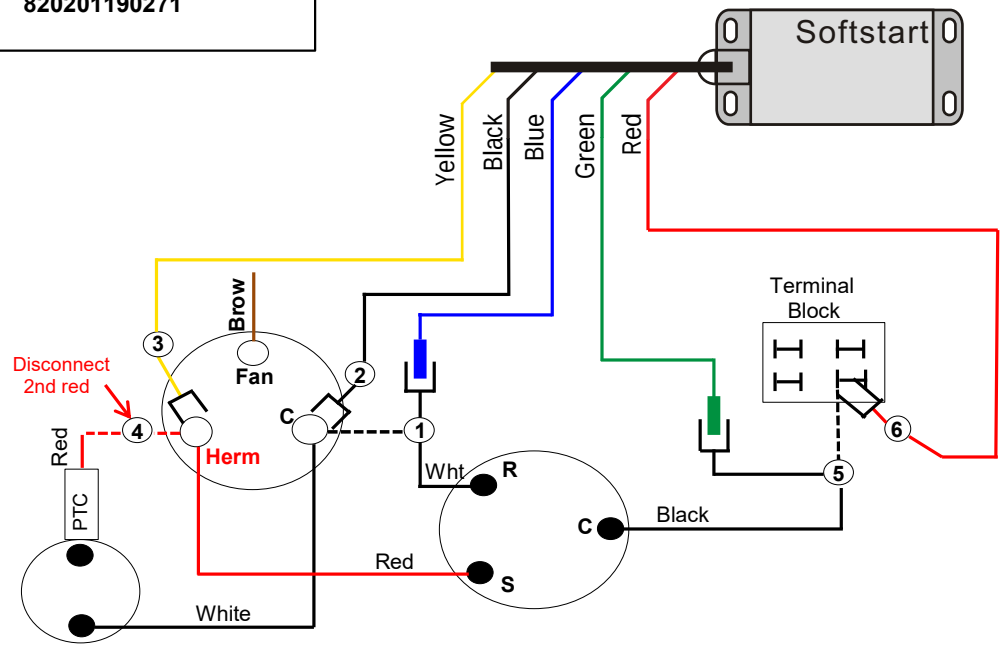

Route ALL softstart wires into electrical box first, then Crimp disconnects as shown in softstart drawing above

Step 1) Follow white compressor wire to **"C"** terminal on RUN capacitor, Disconnect and connect to Blue Softstart wire.

Step 2) Connect Black Softstart wire on terminal White wire was on.

Step 3) Connect Yellow Softstart wire on a terminal next to Red Compressor wire on **HERM** side of RUN capacitor.

Step 4) **IF** you see a 2nd red wire next to Red compressor wire **Disconnect** and tape end.

Step 5) Follow Black compressor wire to Terminal block, Disconnect and connect to Green Softstart wire.

Step 6) Connect Red Softstart wire on terminal Block black wire was on.

Secure all wires

Turn power and AC breaker on, Turn fan on hi 1 min., Turn AC to auto cool set Tstat to 55ºF.
Go look at softstart you should have a green light (you may have a 3 min delay before light turn green) IF after 3 full min no green light call me.
Green light on, Turn ac off tape #1 & 5 connections, replace all covers the turn ac back on and rum for 3 min.